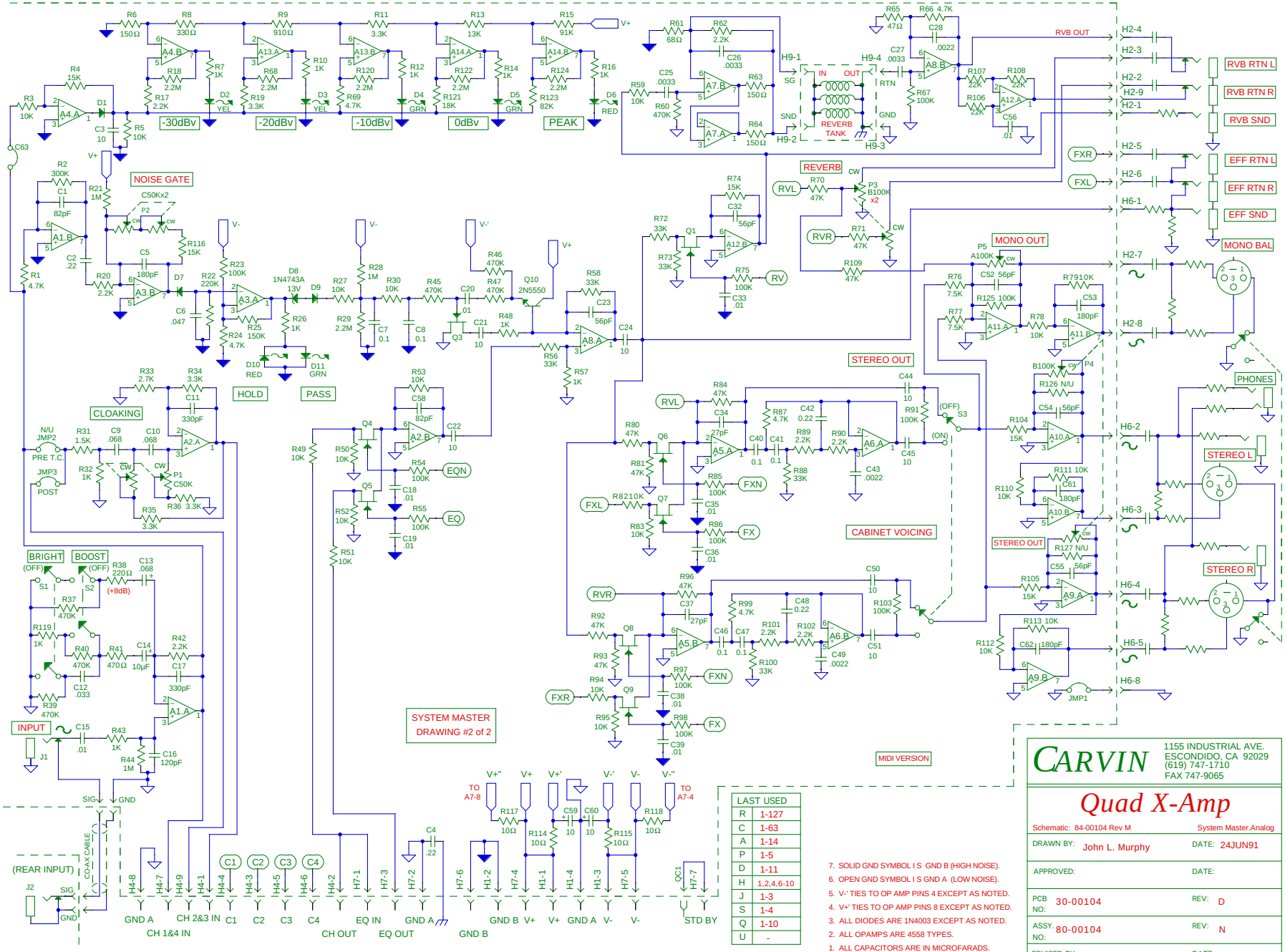

LAST USED	
R	1-127
C	1-63
A	1-14
P	1-5
D	1-11
H	1,2,4,6-10
J	1-3
S	1-4
Q	1-10
U	-

7. SOLID GND SYMBOL I S GND B (HIGH NOISE).
6. OPEN GND SYMBOL I S GND A (LOW NOISE).
5. V-' TIES TO OP AMP PINS 4 EXCEPT AS NOTED.
4. V+' TIES TO OP AMP PINS 8 EXCEPT AS NOTED.
3. ALL DIODES ARE 1N4003 EXCEPT AS NOTED.
2. ALL OPAMPS ARE 4558 TYPES.
1. ALL CAPACITORS ARE IN MICROFARADS.

NOTES: UNLESS OTHERWISE INDICATED

CARVIN
1155 INDUSTRIAL AVE.
ESCONDIDO, CA 92029
(619) 747-1710
FAX 747-9065

Quad X-Amp

Schematic: 84-00104 Rev M — System Master.Analog

DRAWN BY:	John L. Murphy	DATE:	24JUN91
APPROVED:		DATE:	
PCB NO:	30-00104	REV:	D
ASSY. NO:	80-00104	REV:	N
REVISED BY:	C. McEUEN	DATE:	24FEB94